H0200 card instructions

1. Overview

H0200 card is a multi-function I/O card used in H1 series inverter. It can realize 10 digital input , 3 relay output , 2 analog input , 2 analog output, STO input and RS-485 communication interface. It can be connected to the upper computer online.

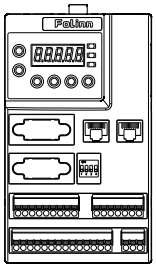

H0200 Function Card Diagram

2. Mechanical installation

Please install it when the inverter is completely powered off; align the H0200 card with the pins (26 pins) on the inverter power board and insert tightly.

⚠WARNING: Do not plug or unplug H0200 card on power!

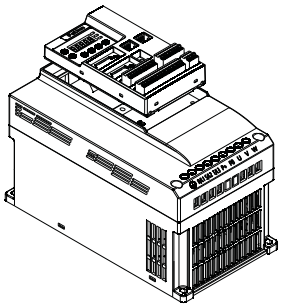

H0200 Function Card Mechanical Installation Diagram

3. Wiring diagram

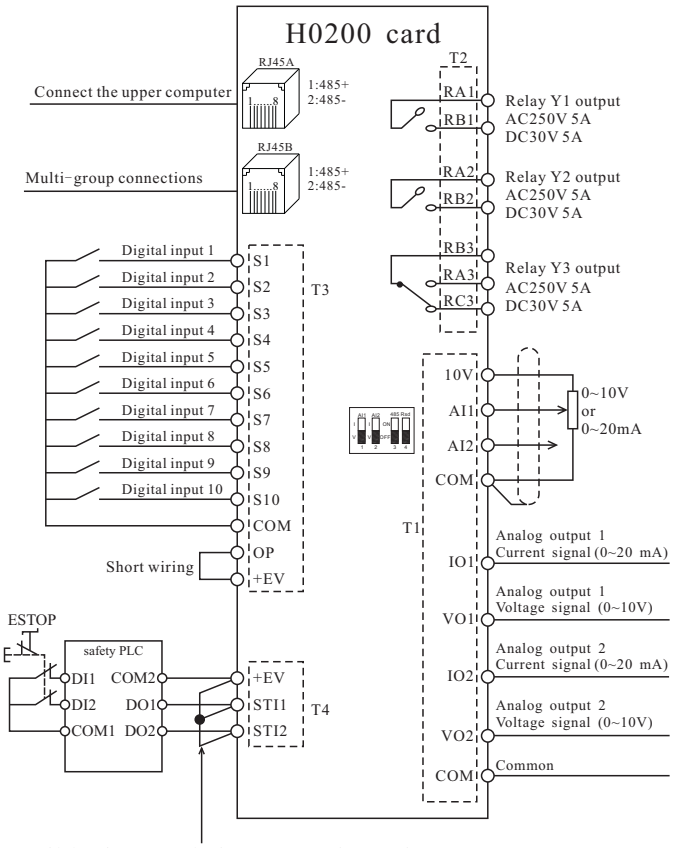

This is a short connection between +EV and STI1 and STI2,
For safety function wiring, remove this short wiring.

4. Control terminals

Input-output signal description				
Port	Categor	Needle	Name	Function
RJ45A	Communi Cations	1	485+	485 communication (MODBUSRTU), two network ports share a 485 interface, and can't connect two master stations at the same time
RJ45B		2	485-	
T1	Analog Inputs	1	10V	10V Power Terminal
		2	AI1	Analog input 1(0~10 V or 0~20 mA)
		3	AI2	Analog input 2(0~10 V or 0~20 mA)
		4	COM	Common
	Analog Output	5	IO1	Analog output 1 current signal (0~20 mA)
		6	VO1	Analog output 1 voltage signal (0~10 V)
		7	IO2	Analog output 2 current signal (0~20 mA)
		8	VO2	Analog output 2 voltage signal (0~10 V)
		9	COM	Common
T2	Relay Output	1	RA1	Relay Y1 output (open all the way)
		2	RB1	
		3	RA2	Relay Y2 output (open all the way)
		4	RB2	
		5	RA3	Relay Y3 output (open and closed)
		6	RB3	
		7	RC3	
T3	Digital Input	1	COM	Common
		2	S1	Digital Input 1
		3	S2	Digital Input 2
		4	S3	Digital Input 3
		5	S4	Digital Input 4
		6	S5	Digital Input 5
		7	S6	Digital Input 6
		8	S7	Digital Input 7
		9	S8	Digital Input 8
		10	S9	Digital Input 9
		11	S10	Digital Input 10
	Control Power	12	COM	Common
		13	OP	External power input terminals (factory OP and +EV short connection)
		14	+EV	12V Power Terminal
T4	STO	1	+EV	12V power terminals (factory +EV and STI1 and STI2 short connection)
		2	STI1	STO input 1
		3	STI2	STO input 2

5. Digital Input Terminal Connection

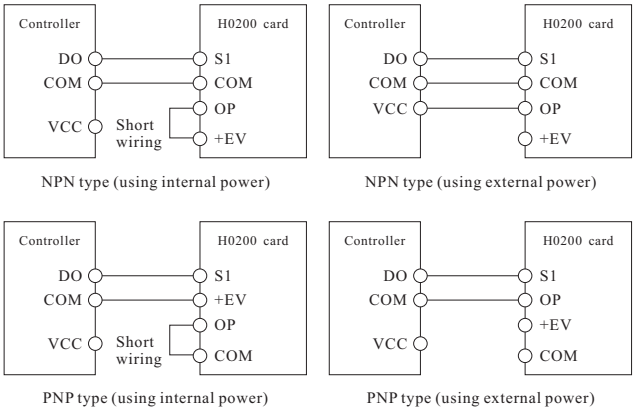

6. Operator instructions

6. 1 Keyboard Appearance and Keyboard Description

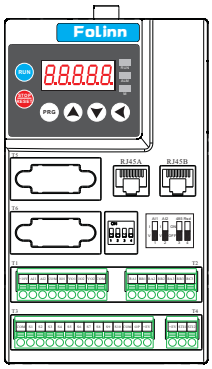

Figure 6-1 keyboard

No.	Structure	Function
1	8.8.8.8.8.	Display
2	PRG	Programming/Exit key
3	◀	The state display interface is the state switch key,Other interfaces are left-shift, long-press for 2 seconds is the confirmation button.
4	RUN	Run key
5	▲	Programming mode is numeric change key, non-programming mode is incrementally decreasing (UP/DOWN) selection key, seeP01.63,P02.03,P02.04
6	▼	
7	STOP RESET	Stop/Reset key

6. 2 Indicator Light Description

Indicator light	State	Function
RUN	Bright/flash	Running/decelering
ALM	Bright	Fault indication
M	Bright	Customer customization

6. 3 Display project description

Monitor items	display project descriptions
F	Output frequency
C	Output current
U	Output voltage
d	DC bus voltage
H	Display value 1 (selected by P01.68)
t	Display value 1 (selected by P01.69)
A	The current alarm
E	The current fault

7. STO function of inverter safety switch

7. 1 Function description

H0200 function card provide the STO function (Safe Torque Off function).STI1 and STI2 signal input are used to turn Off IGBT to prevent the generation of motor torque, so as to achieve the purpose of safe stopping.

7. 2 Security input terminal function details

Terminal name	Function description
+EV	When STO function is not used, the STI1 and STI2 can be connected by STI 1 and STI2
STI1	STO function channel 1 signal input
STI2	STO function channel 2 signal input

Table 1 Terminal function description

The action logic and keyboard display after input of STI1/STI2 signal are shown in Table 2 below

Signal	State			
STI1and +EV	ON	OFF	ON	OFF
STI2 and +EV	ON	ON	OFF	OFF
Frequency Output	Ready to complete output	STI1 mode torque output stop	STI2 mode torque output stop	STO mode torque output stop
Keyboard abnormal display	No abnormal display	E0034	E0035	E0033(P09.49=2)

Table 2 Action Logic and Keyboard Display Description

E0033 means STI1 and STI2 act at the same time.
E0034 means STI1 action.
E0035 means STI2 action.
E0036 means STO circuit diagnoses abnormal.

7. 3 Wiring diagram

7.3.1 safety control loop internal circuit diagram as shown in figure 1 below.
7.3.2 When leaves the factory, connect the terminal +EV,STI1,STI2, in the safety control loop with a short connection, as shown in the red box.
7.3.3 Use frequency safety control circuit wiring as follows;
(1) Remove +EV,STI1,STI2 short wiring.
(2) As shown in figure 2 below, the switch ESTOP contact must be closed when normal, the frequency can output and do not abnormal.
(3) When STO mode, the switch ESTOP open. Frequency stop output, panel display E0033.

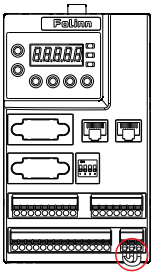

Figure 1

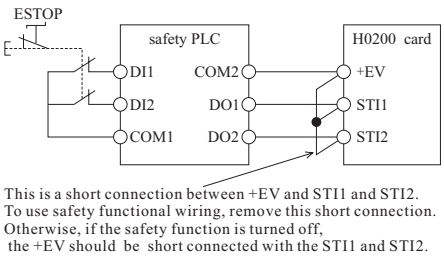

Figure 2

7.4 Fault Resolution and repair

If the keyboard appears E0033/E0034/E0035/E0036, please refer to the following instructions for troubleshooting.

Keyboard display	Explain
E0033	Safety Torque Output Stop Function Please reconfirm STI1 STI2 connection Reset emergency switch (ON:on) and re-energize Please reconfirm STI1/STI2 and +EV wiring , confirm that all wiring is correct,then re-power, if there also E0033, contact the local agent or the original factory.
E0034	STI1 internal circuit diagnosed abnormal Exclusions : Check STI1 wiring again Reset emergency switch (ON:on) and re- energize Please reconfirm STI1 and + EV connection Confirm that all wiring is correct, re-power, if there will be E0034,contact the local agent or original factory.
E0035	STI2 internal circuit diagnosed abnormal Exclusions: Check STI2 wiring again Reset emergency switch (ON:on) and re-energize Please reconfirm STI2 and + EV connection Confirm that all wiring is correct, re-power, if there will be E0035, contact the local agent or original factory.
E0036	Internal circuit diagnosed abnormal After confirming that all external wiring is correct, power up again, if there will be E0036(P09.49 ≠ 0), contact local agent or original factory.

8. H0200 card supplementary parameters table

Parameter number	Function	Setting range	Factory value
P03.30	Y1 terminal source (RA1 、RB1)	0: Always 0; 1: Always 1; 2: Stopped; 3: Operation; 4: Fault; 5: Warnings; 6: Reversing; 7: Ready; 64: STO state; 100~9999: Address	3
P03.31	Y1 terminal source bit	0~31	0
P03.32	Y2 terminal source (RA2 、RB2)	0: Always 0; 1: Always 1; 2: Stopped; 3: Operation; 4: Fault; 5: Warnings; 6: Reversing; 7: Ready; 64: STO state; 100~9999: Address	4
P03.33	Y2 terminal source bit	0~31	0
P03.34	Y3 terminal source (RA3、RB3、RC3)	0: Always 0; 1: Always 1; 2: Stopped; 3: Operation; 4: Fault; 5: Warnings; 6: Reversing; 7: Ready; 64: STO state; 100~9999: Address	5
P03.35	Y3 terminal source bit	0~31	0
P03.36	Y1 output delay time	0.000~6000.000	0.000s
P03.37	Y2 output delay time		
P03.38	Y3 output delay time		
P03.39	AI filtering time	0.100~600.000	0.100s
P03.41	AI1 low voltage (current)	−999999.000~999999.000	0.000V(mA)
P03.42	AI1 high-end voltage (current)		10.000V(mA)
P03.43	AI1 low-end settings	−999999.000~999999.000	0.000%
P03.44	AI1 high-end settings		100.000%
P03.46	AI2 low voltage (current)	−999999.000~999999.000	0.000V(mA)
P03.47	AI2 high-end voltage (current)		10.000V(mA)
P03.48	AI2 low-end settings	−999999.000~999999.000	0.000%
P03.49	AI2 high-end settings		100.000%
P03.61	AO1 signal sources	0: Always 0; 1: Always 10 V/20mA; 2: Output frequency; 3: Motor current; 4: Output voltage; 5: Motor torque; 6: Output power; 7: Set frequency; 100~9999: Reference parameter number value	2
P03.62	AO1 low-end settings	−999999.000~999999.000 The set value represents frequency, current, voltage, etc	0.000
P03.63	AO1 high-end settings		50.000
P03.64	AO1 low voltage (current)	−999999.000~999999.000	0.000V(mA)
P03.65	AO1 high-end voltage (current)		10.000V(mA)
P03.67	AO2 signal sources	0: Always 0; 1: Always 10 V/20mA; 2: Output frequency; 3: Motor current; 4: Output voltage; 5: Motor torque; 6: Output power; 7: Set frequency; 100~9999: Reference parameter number value	3
P03.68	AO2 low-end settings	−999999.000~999999.000 The set value represents frequency, current, voltage, etc	0.000
P03.69	AO2 high-end settings		50.000
P03.70	AO2 low voltage (current)	−999999.000~999999.000	0.000V(mA)
P03.71	AO2 high-end voltage (current)		10.000V(mA)
P09.49	STO Display Select	0: STO/STO1/STO2/STO3 status is not displayed; 1: Alarm when STO state; 2: Fault when STO state	0